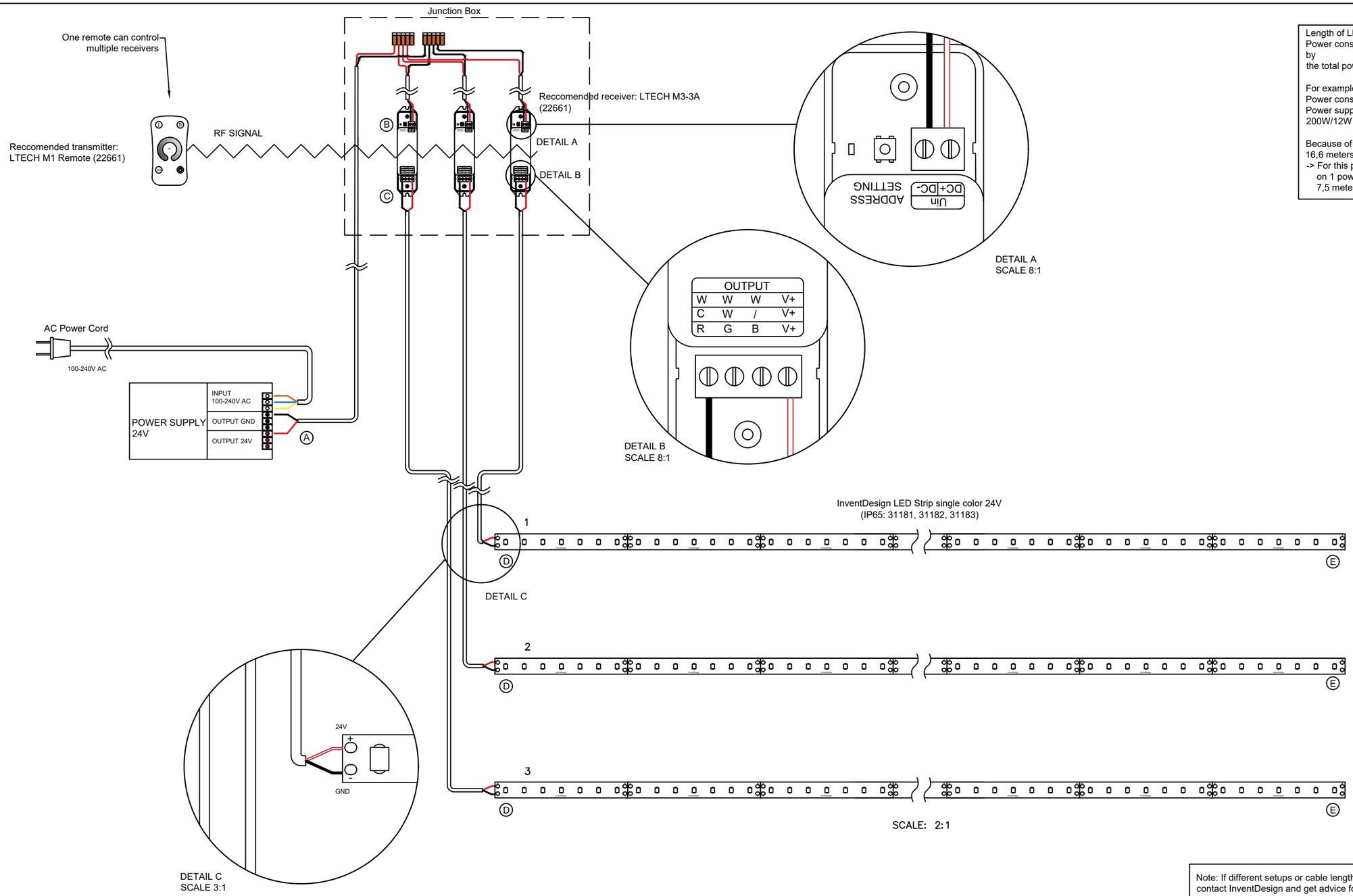

Length of LED you can connect to 1 power supply:
Power consumption LED strip per meter divided by
the total power of the power supply

For example:
Power consumption LED strip IP65: 12W/meter
Power supply: 200W
200W/12W = 16,6 meters

Because of voltage drop you cannot connect 16,6 meters on 1 powercable
-> For this pixelstrip you can connect on 1 powercable:
7,5 meters

Note: If different setups or cable lengths are necessary you can always contact InventDesign and get advice for your particular setup

Disclaimer: No rights can be derived from the information provided on this sheet

Products can only be installed by professional installers

Cable Coding

Color	Function
Brown	L
Blue	N
Yellow	PE
Red	V+
Black	GND
Green	
Light blue	

Recommended cable lengths

Maximum length from A to B	5 meters	24V Power Cable 2x1MM2 (70103R)
Maximum length from C to D	5 meters	24V Power Cable 2x1MM2 (70103R)
Maximum length from D to E	6 meters	LED Strip

		NAME	DATE	
A3	DRAWN		29-5-2018	InventDesign
	CHK'D			TITLE: WIRING DIAGRAM
	REV	1.0	29-5-2018	
UNLESS OTHERWISE SPECIFIED: DIMENSIONS ARE IN MILLIMETERS	BASIC SETUP			PRODUCT: LED Strip High IP65
				SCALE: NOT TO SCALE SHEET 1 OF 2